Sheet 2

Problem 1:

With KOH etchant, sketch the final shape of etched pits as shown in figure 1.
Design a complete process to achieve each profile starting from a bare (100) surface plane silicon wafer.
The [110] direction is out of the paper.

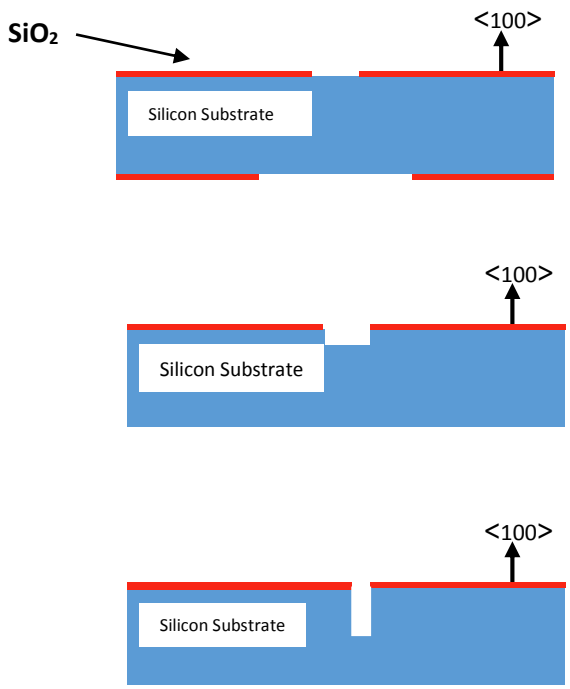

Figure 1

Problem 2:

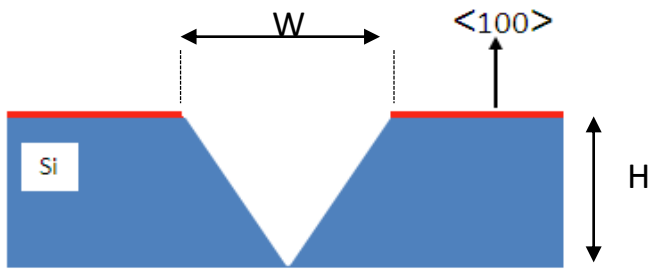

Figure 2

For the given substrate shown in figure 2, if the wafer's thickness H = 500 µm, find the minimum window's width to open a v-groove which exactly touches the bottom of the substrate using KOH etchant. Find the required time to complete the etching as shown in figure 2.

Alkaline anisotropic etchants: some main features of etchants

Etchant	KOH	TMAH	EDP
Rate (at 80 °C) µm/min	1	0.5	1 (at 115 °C)
Typical concentration	40%	25%	80%
Selectivity (100):(111)	200:1	30:1	35:1
Selectivity $Si:SiO_2$	200:1	2000:1	10 000:1
Selectivity $Si:Si_3N_4$	2000:1	2000:1	10 000:1

Now it is desired to open a nozzle in the bottom of the substrate with 20 µm width, find the new window opening "W" and the time required to etch the new hole using same etchant KOH.

Problem 3:

With KOH etchant (etch rate at 80˚C is 1 μm/min), sketch the final shape of etched pits as shown in figure 3.
w = 100 μm
h = 500 μm
Etch time = 100 minutes
Assume etch rates of $R_{(100)} : R_{(111)} = 1 : \infty$.
Now, if the etchant temperature decreases such that the etch rate becomes 0.5 μm/min. Find the new etched shape profile.

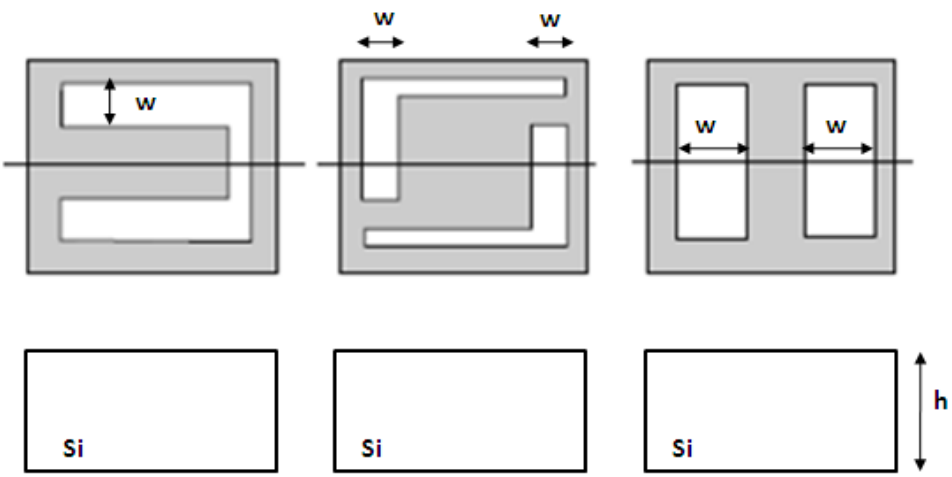

Figure 3

Problem 4:

With KOH, the etch selectivity between the {100} and {111} planes is 400:1, not infinite. Therefore, the sidewalls of a pit etched in a (100) wafer will be very close to the {111} planes but not exactly parallel to them.
What angle do they really make? What is the mask undercut?

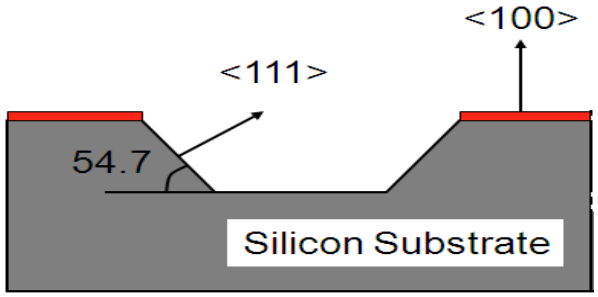

Figure 4