Faculty of Engineering

MCT242: Electronic Instrumentation

Lecture 6:
Opamp Circuits

Inverting Amplifier Analysis

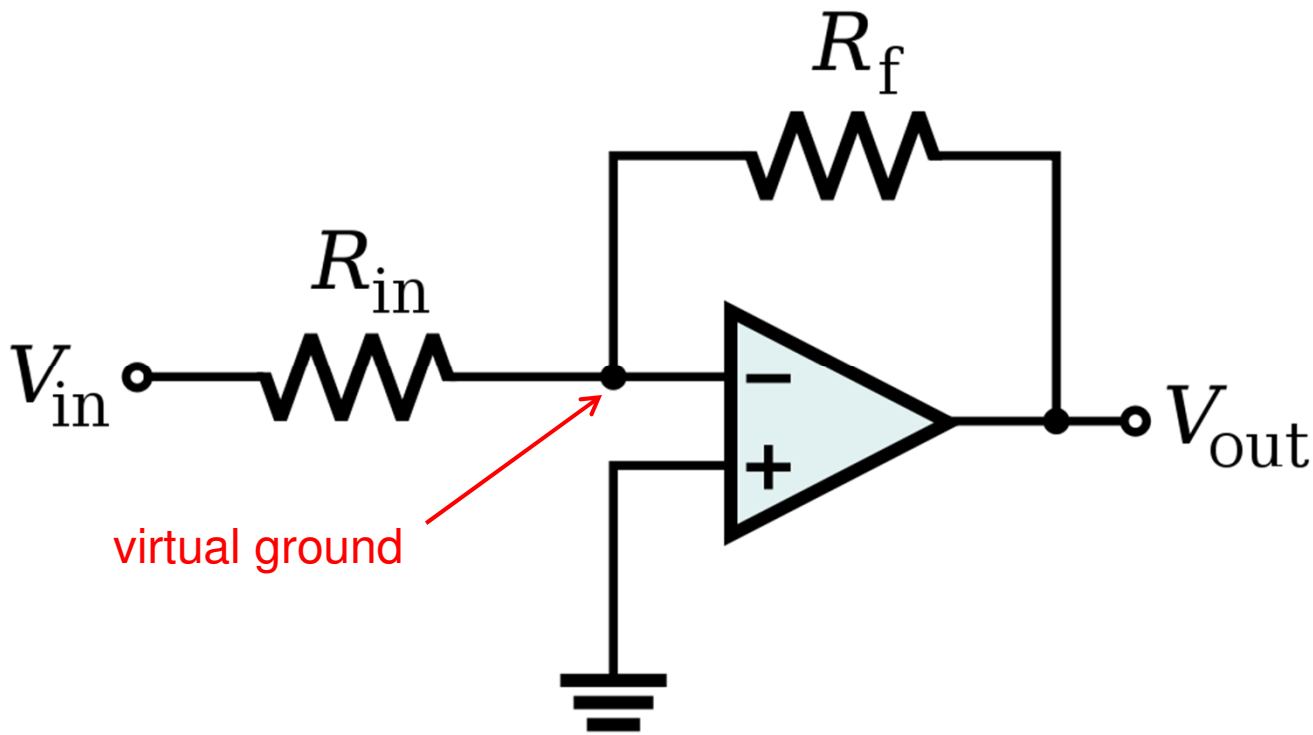

$$V_{out} = -\frac{R_f}{R_{in}} V_{in}$$

Non-Inverting Amplifier Analysis

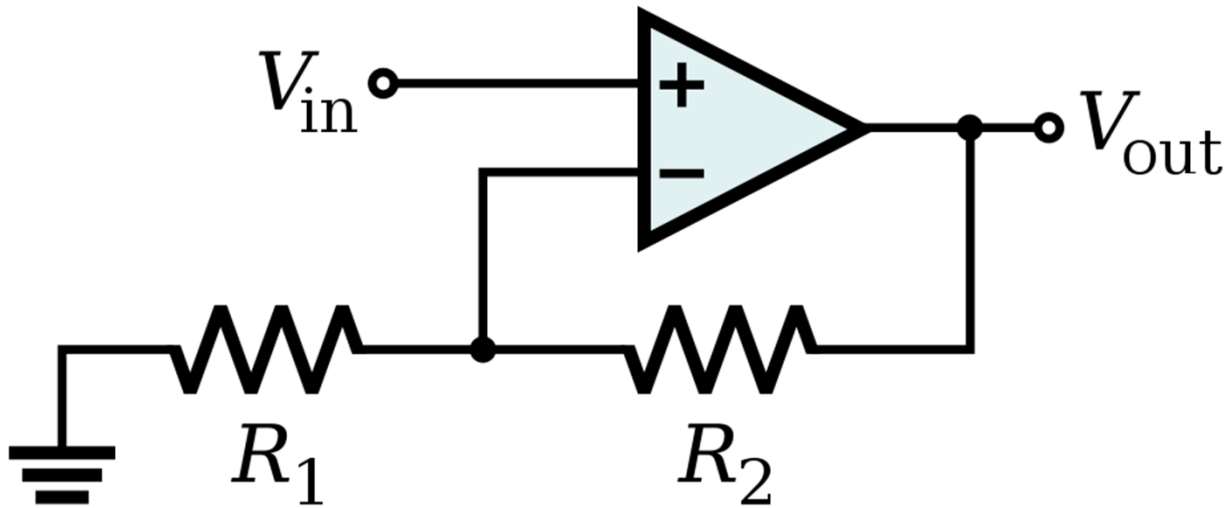

$$V_{\text{out}} = V_{\text{in}} \left(1 + \frac{R_2}{R_1}\right)$$

Op-Amp Buffer

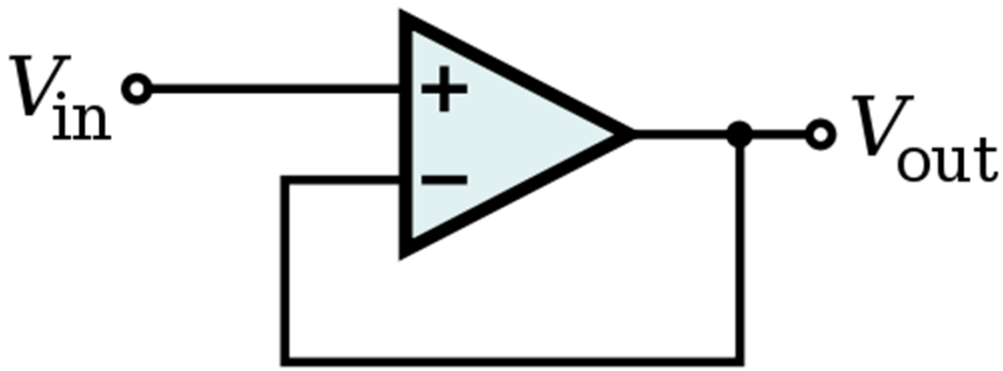

Vout = Vin
Isolates loading effects

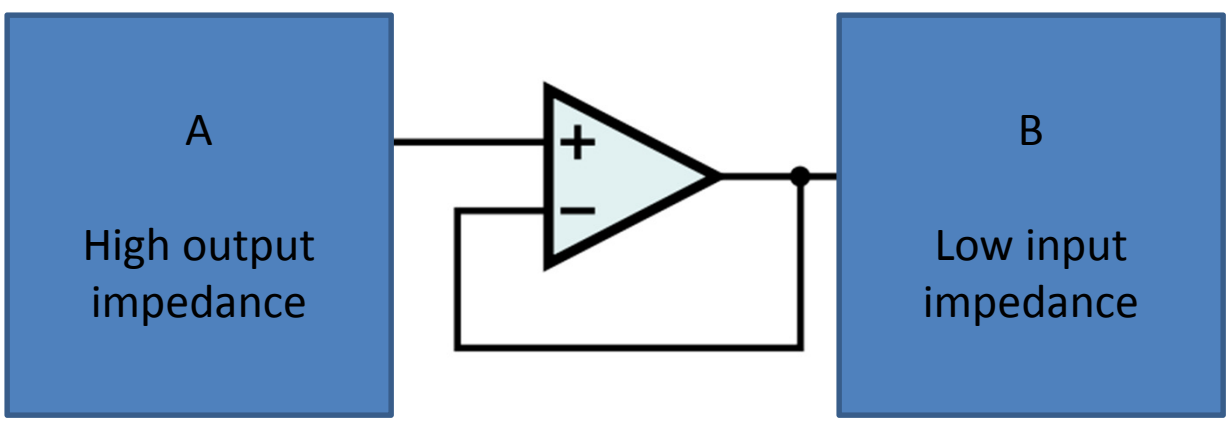

Op-Amp Differentiator

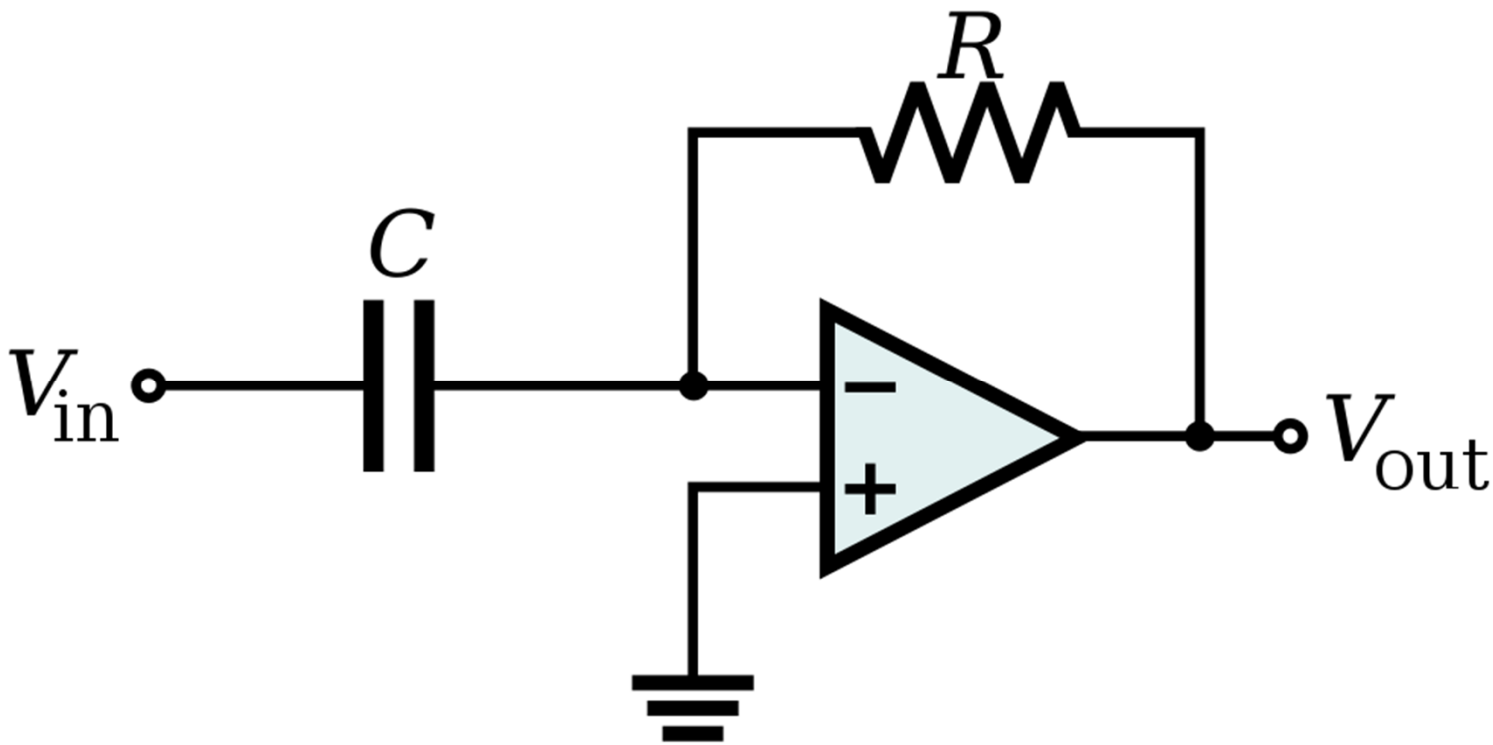

$$V_{\mathrm{out}} = -RC\,\frac{\mathrm{d}V_{\mathrm{in}}}{\mathrm{d}t}$$

Op-Amp Integrator

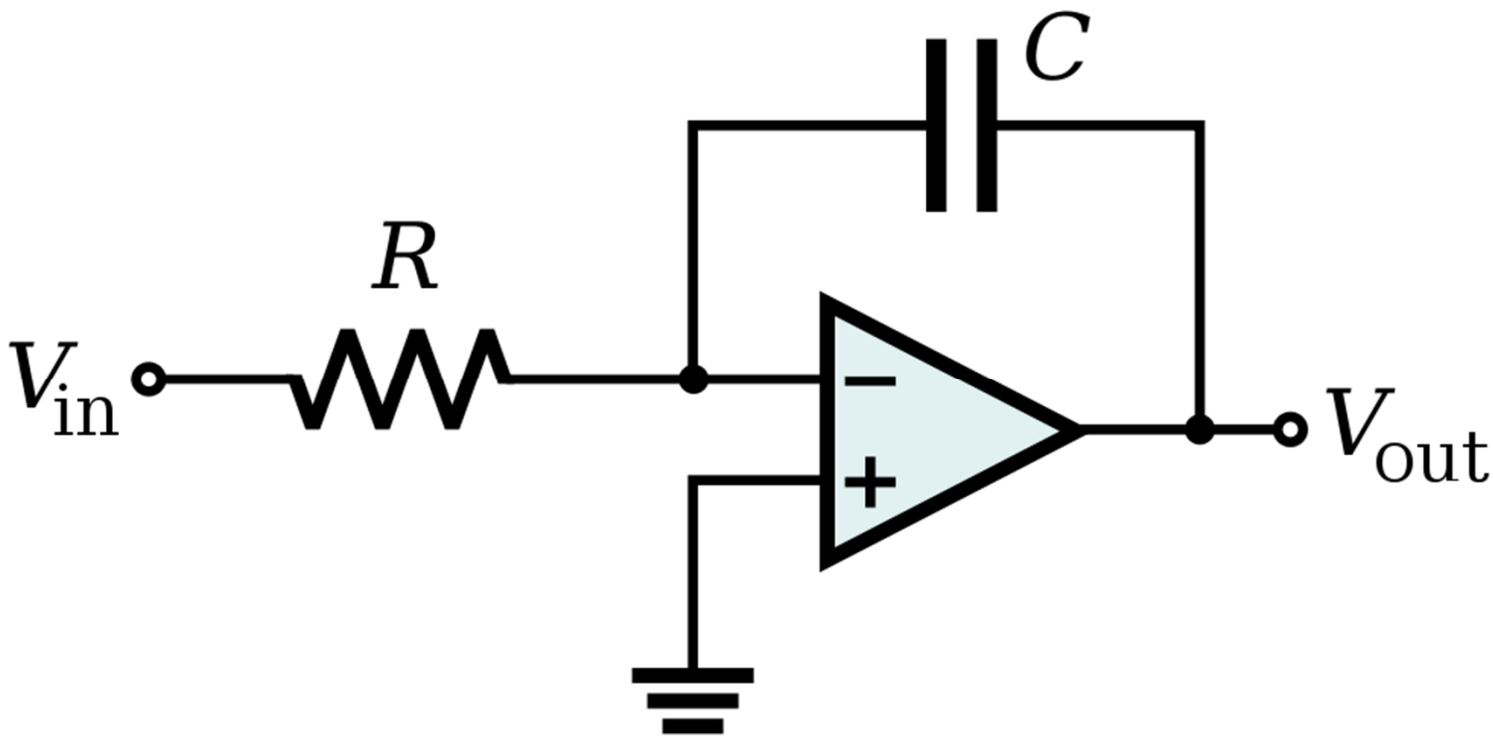

$$V_{\text{out}} = -\int_0^t \frac{V_{\text{in}}}{RC}\,\mathrm{d}t + V_{\text{initial}}$$

Op-Amp Summing Amplifier

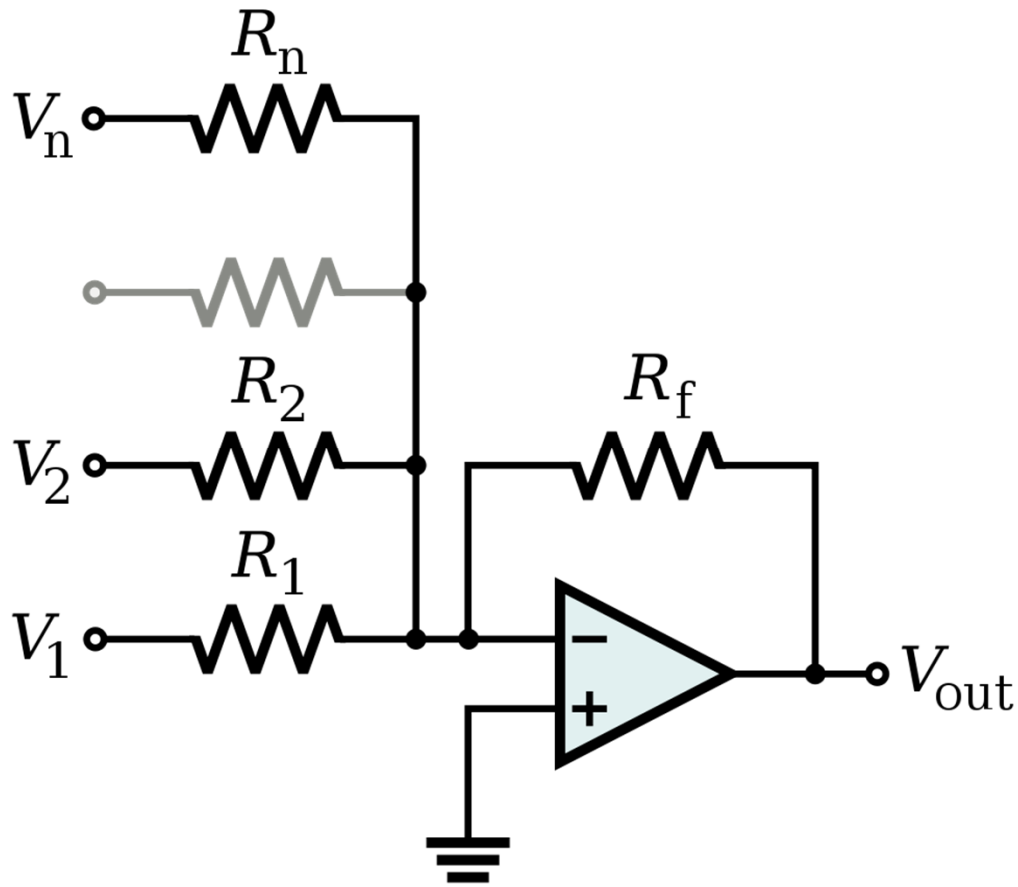

$$V_{\text{out}} = -R_{\text{f}} \left(\frac{V_1}{R_1} + \frac{V_2}{R_2} + \cdots + \frac{V_n}{R_n} \right)$$

Op-Amp Differential Amplifier

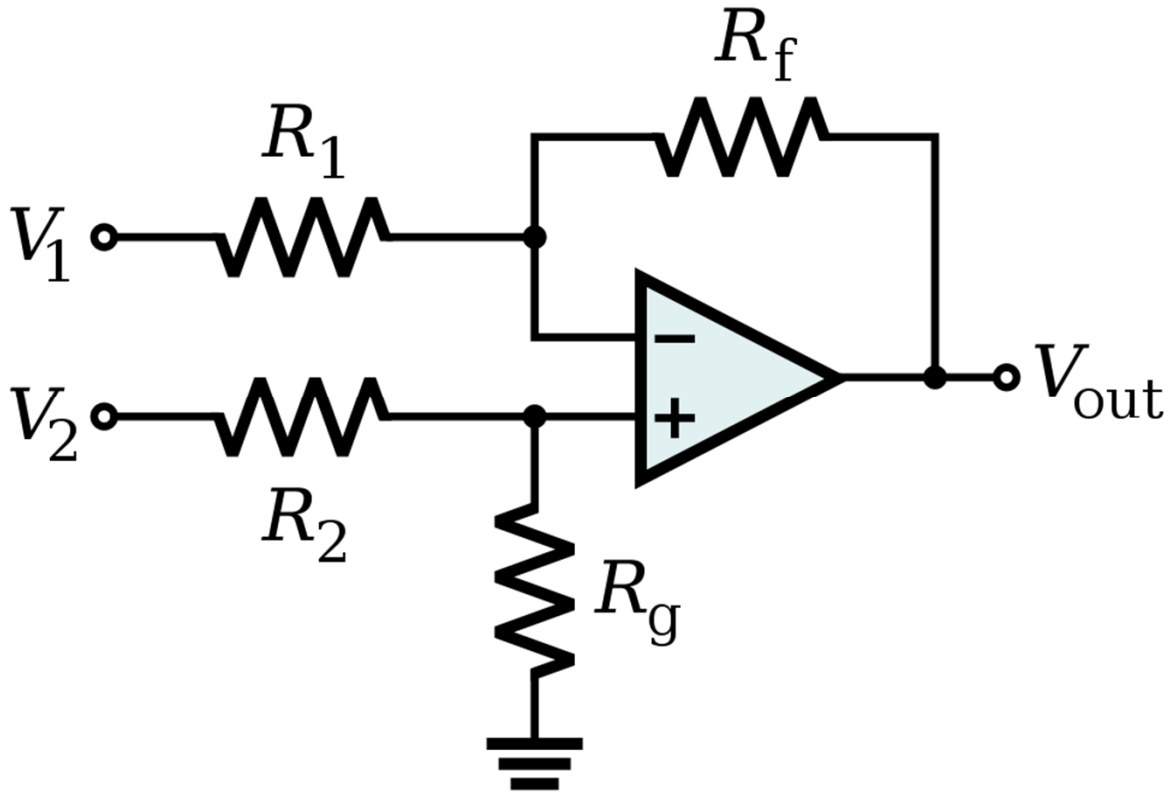

$$V_{out} = \frac{(R_f + R_1)\,R_g}{(R_g + R_2)\,R_1} V_2 - \frac{R_f}{R_1} V_1$$

If $R_1 = R_2$ and $R_f = R_g$: $V_{out} = \frac{R_f}{R_1}(V_2 - V_1)$

Applications of Op-Amps

Filters

Types:

- Low pass filter
- High pass filter
- Band pass filter
- Cascading (2 or more filters connected together)

Low pass filter

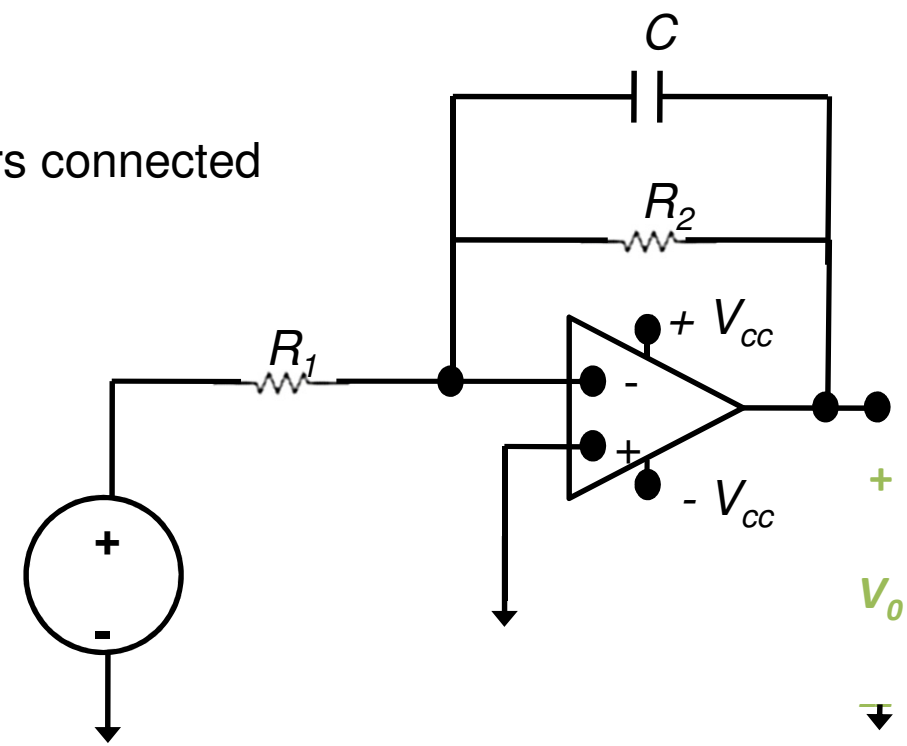

Low pass filter transfer function➔

$$H(s) = \frac{-R_2\omega_c}{sR_1 + R_1\omega_c}$$

Low pass filter Cutoff frequency ➔

$$\omega_c = \frac{1}{R_2 C}$$

Applications of Op-Amps

- Electrocardiogram (EKG) Amplification
  - Need to measure difference in voltage from lead 1 and lead 2
  - 60 Hz interference from electrical equipment

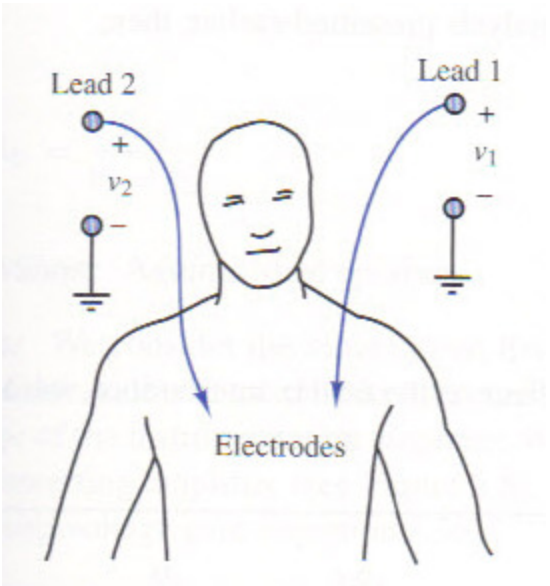

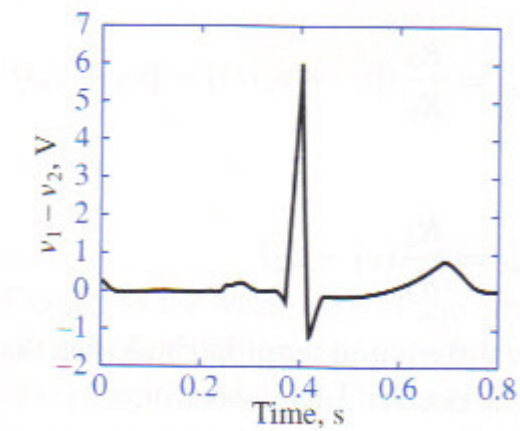

Applications of Op-Amps

- Simple EKG circuit
  - Uses differential amplifier to cancel common mode signal and amplify differential mode signal

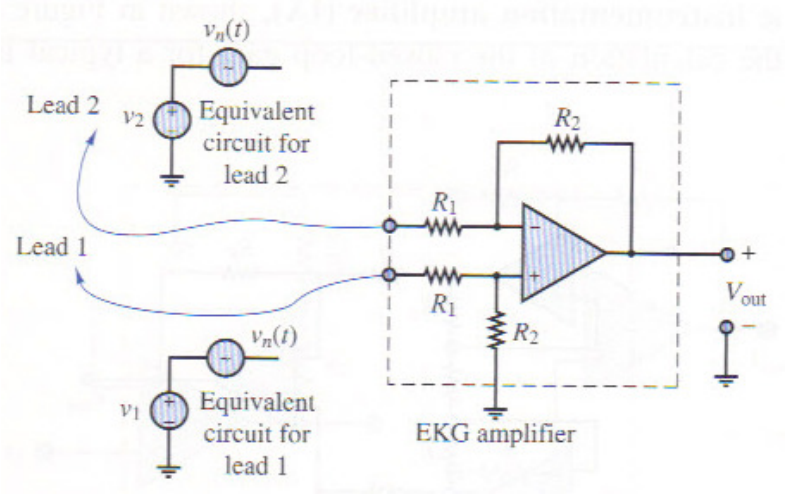

- Realistic EKG circuit
  - Uses two non-inverting amplifiers to first amplify voltage from each lead, followed by differential amplifier
  - Forms an "instrumentation amplifier"

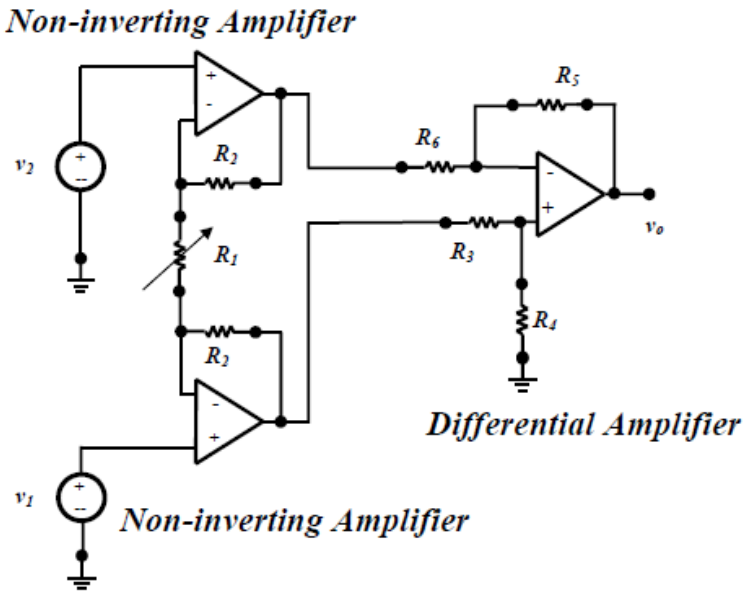

Strain Gauge

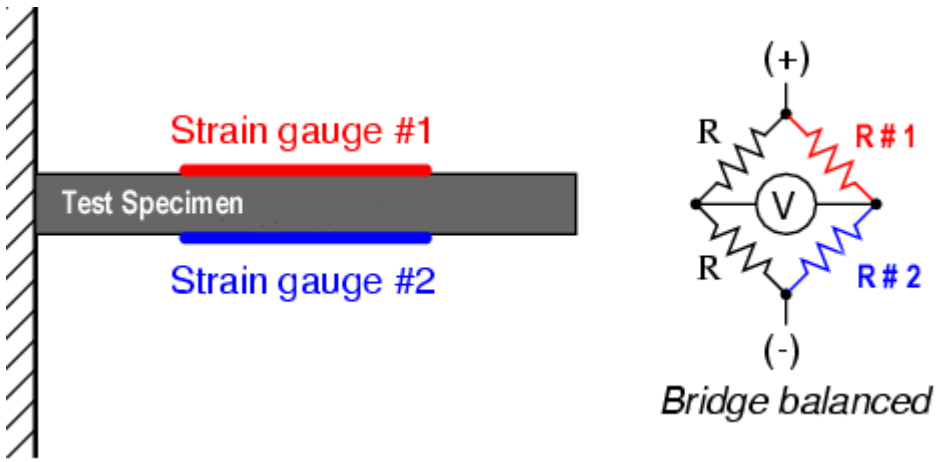

Use a Wheatstone bridge to determine the strain of an element by measuring the change in resistance of a strain gauge

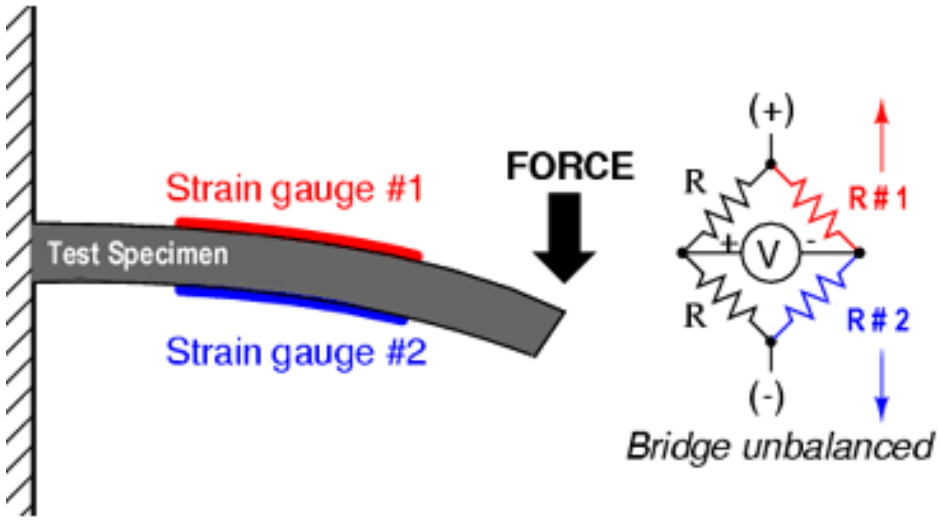

(No strain) Balanced Bridge

R #1 = R #2

(Strain) Unbalanced Bridge

R #1 ≠ R #2

Strain Gauge

Half-Bridge Arrangement

Op amp used to amplify output from strain gauge

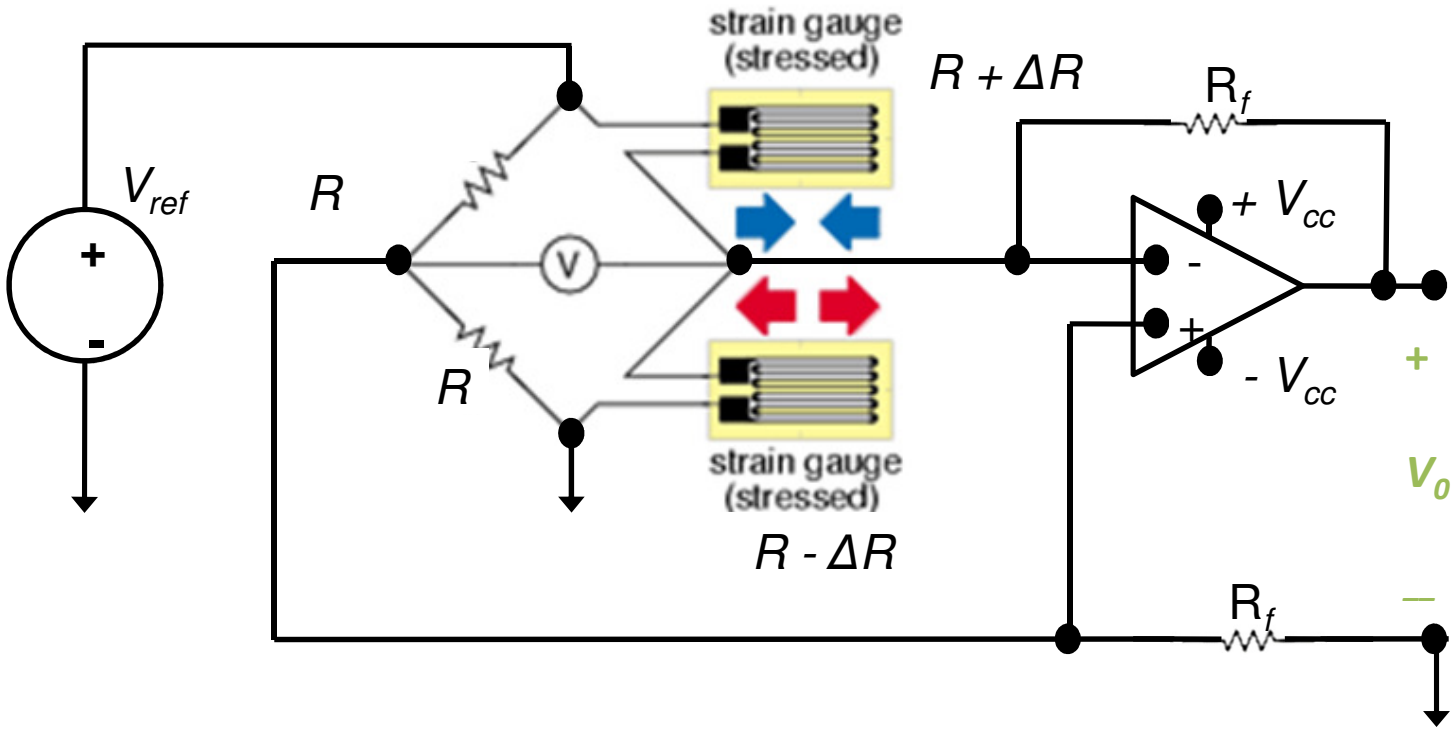

Using KCL at the inverting and non-inverting terminals of the op amp we find that ➔ $\varepsilon \sim V_o = 2\Delta R(R_f/R^2)$

Applications of Op-Amps

- Piezoelectric Transducer
  - Used to measure force, pressure, acceleration
  - Piezoelectric crystal generates an electric charge in response to deformation

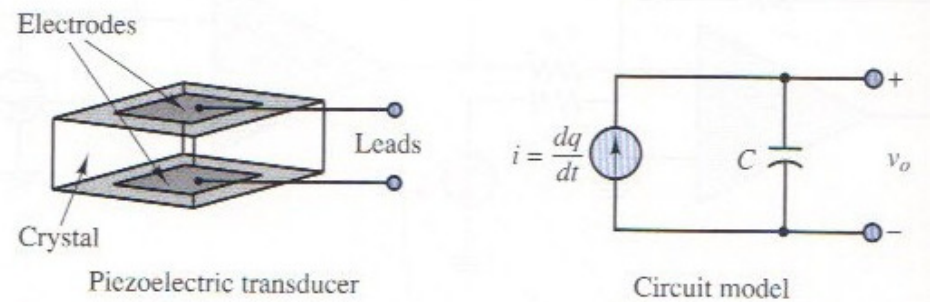

- Use Charge Amplifier
  - Just an integrator op-amp circuit

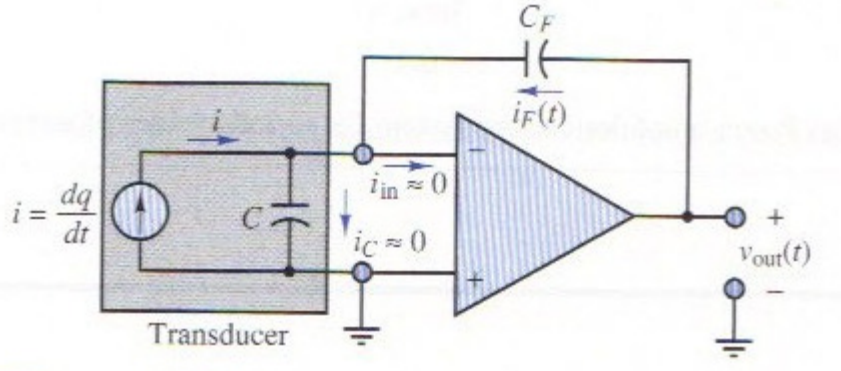

PID Controller – System Block Diagram

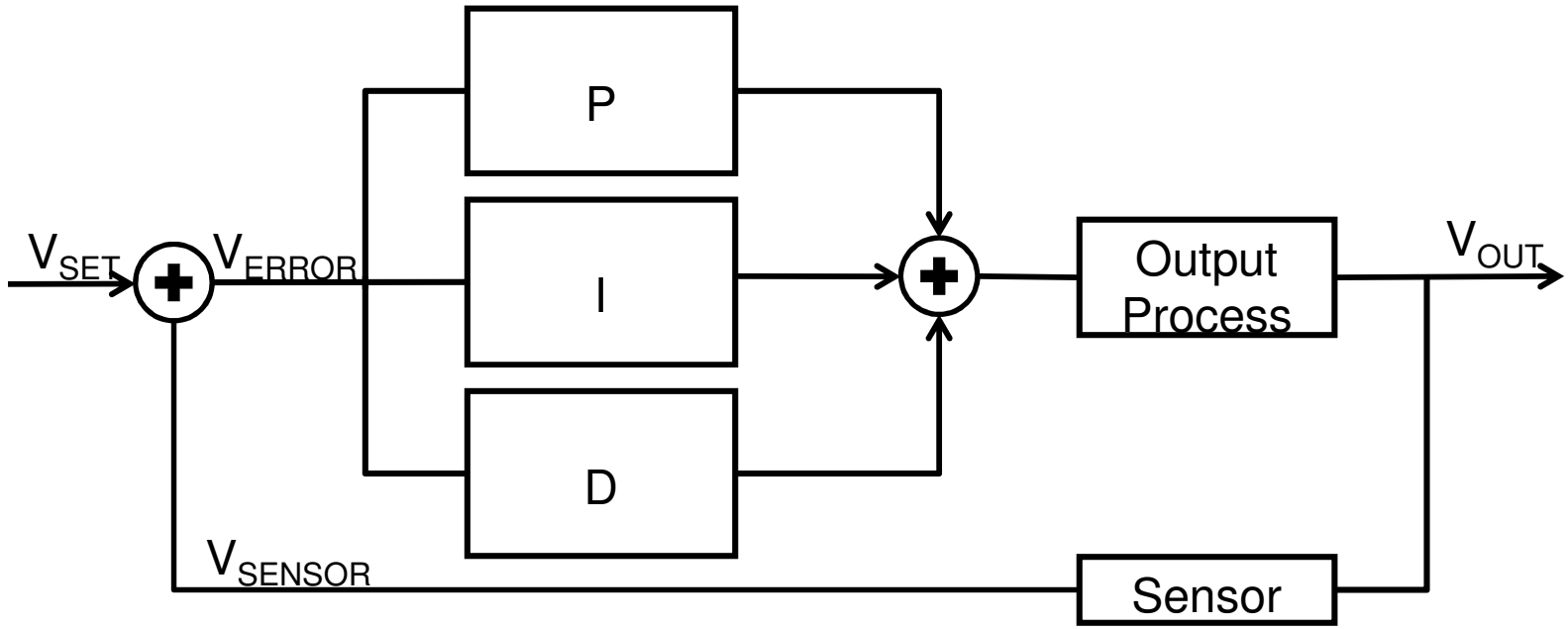

- Goal is to have $V_{SET} = V_{OUT}$
- Remember that $V_{ERROR} = V_{SET} - V_{SENSOR}$
- Output Process uses V_{ERROR} from the PID controller to adjust V_{out} such that it is $\sim V_{SET}$

Applications

PID Controller – System Circuit Diagram

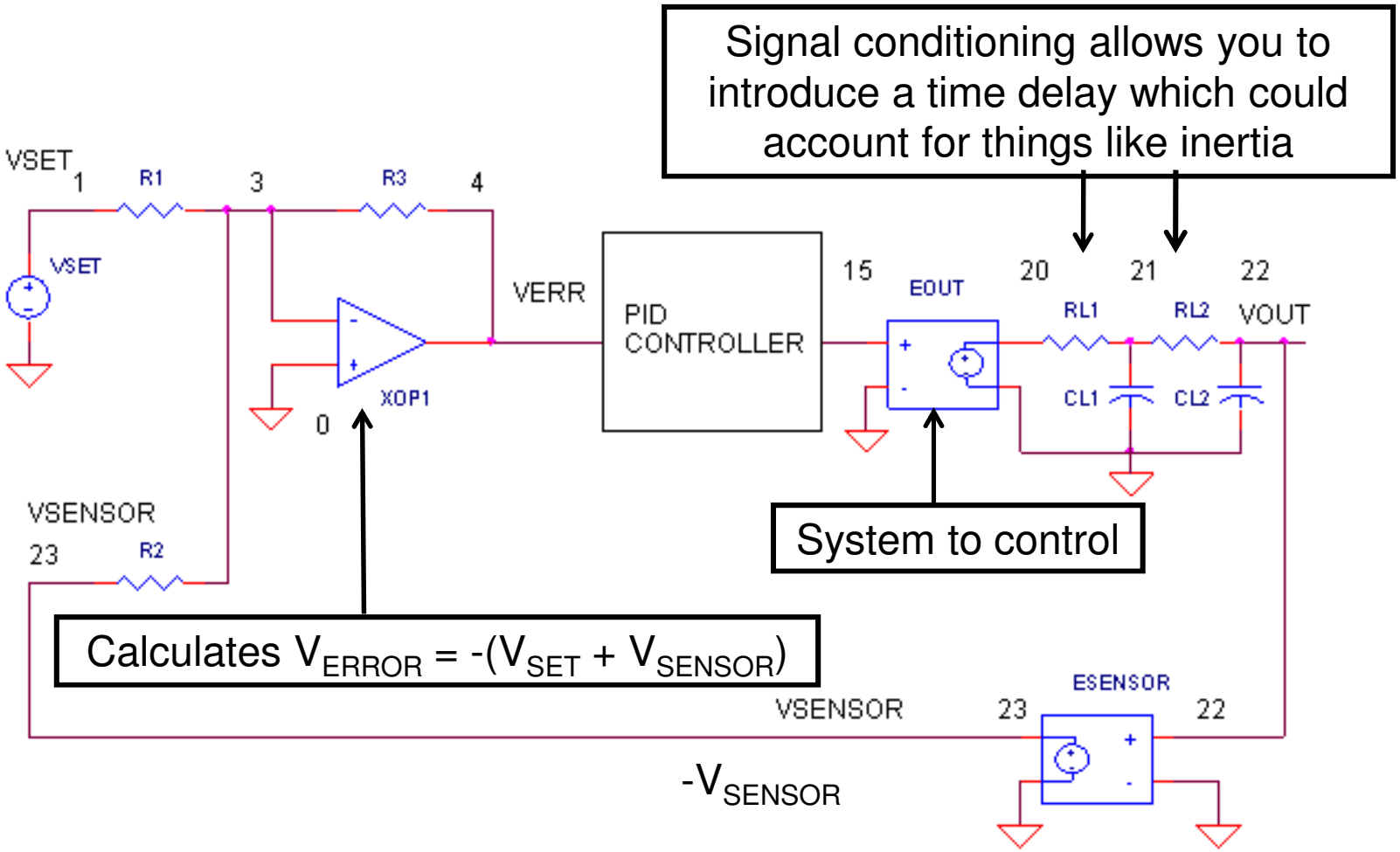

Source:
http://www.ecircuitcenter.com/Circuits/op_pid/op_pid.htm

Applications

PID Controller – PID Controller Circuit Diagram

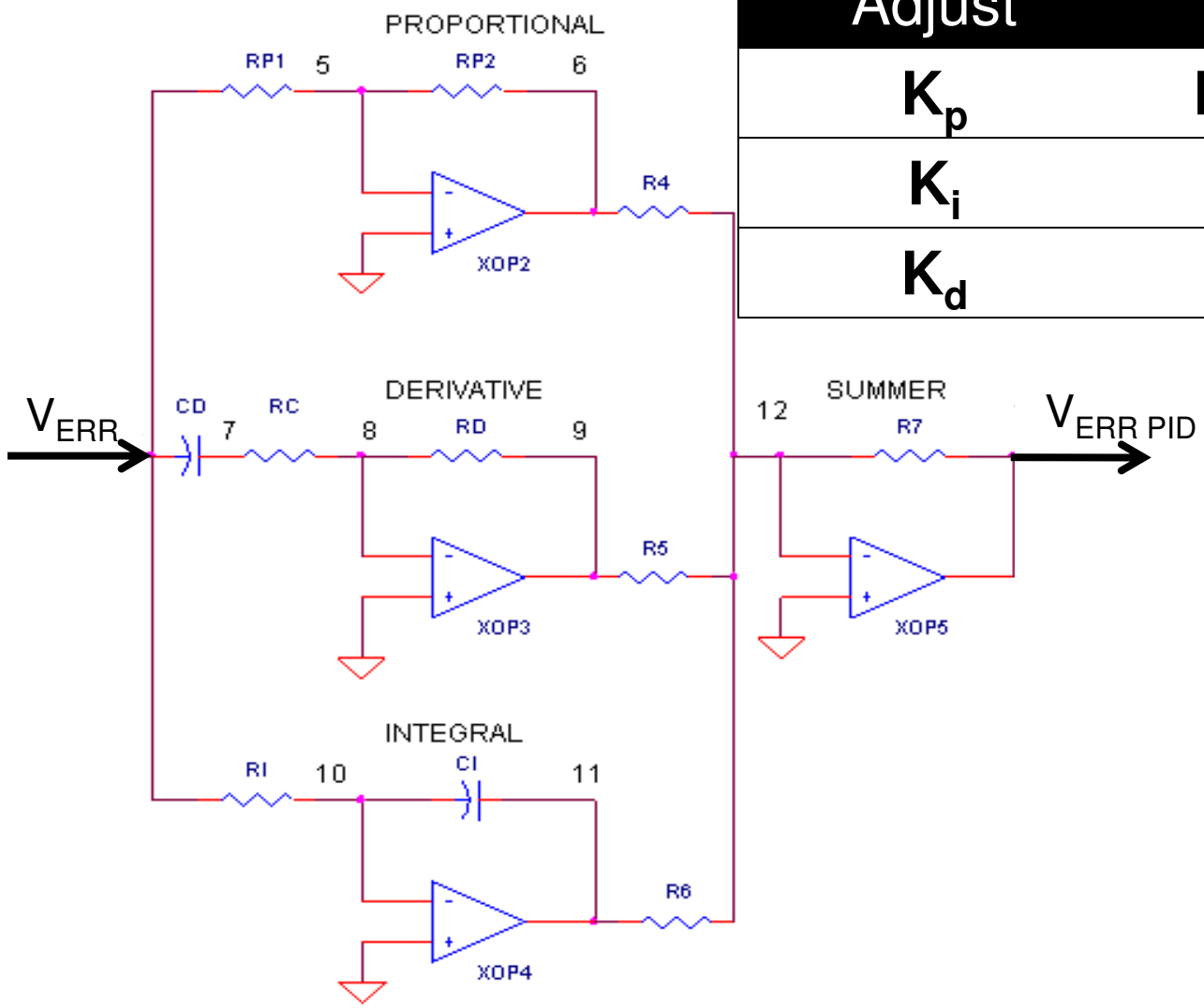

Adjust	Change
K_p	RP1, RP2
K_i	RI, CI
K_d	RD, CD

Applications of Op-Amps

- Example of PI Control: Temperature Control

- Thermal System we wish to automatically control the temperature of:

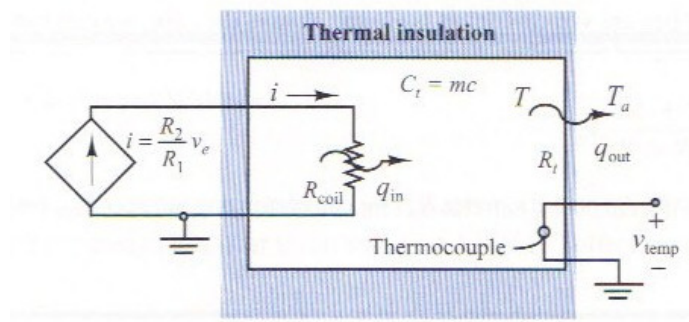

- Block Diagram of Control System:

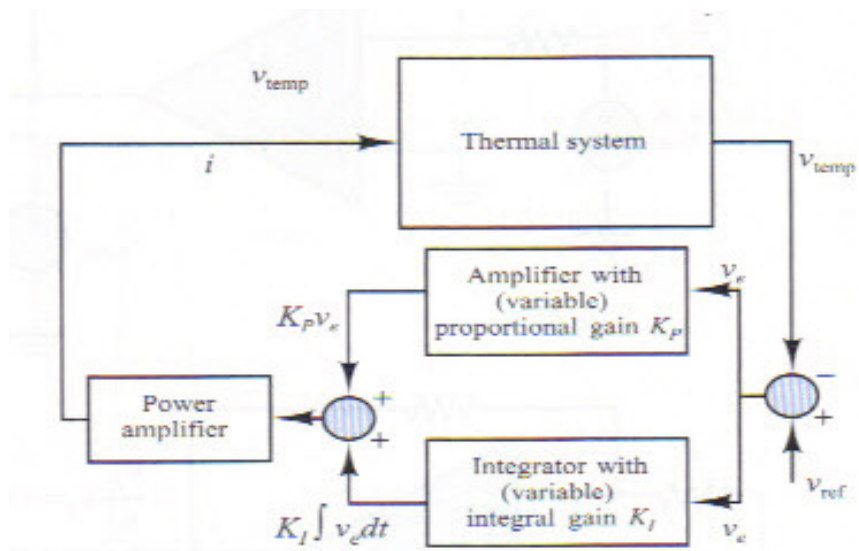

Applications of Op-Amps

- Example of PI Control: Temperature Control

- Voltage Error Circuit:

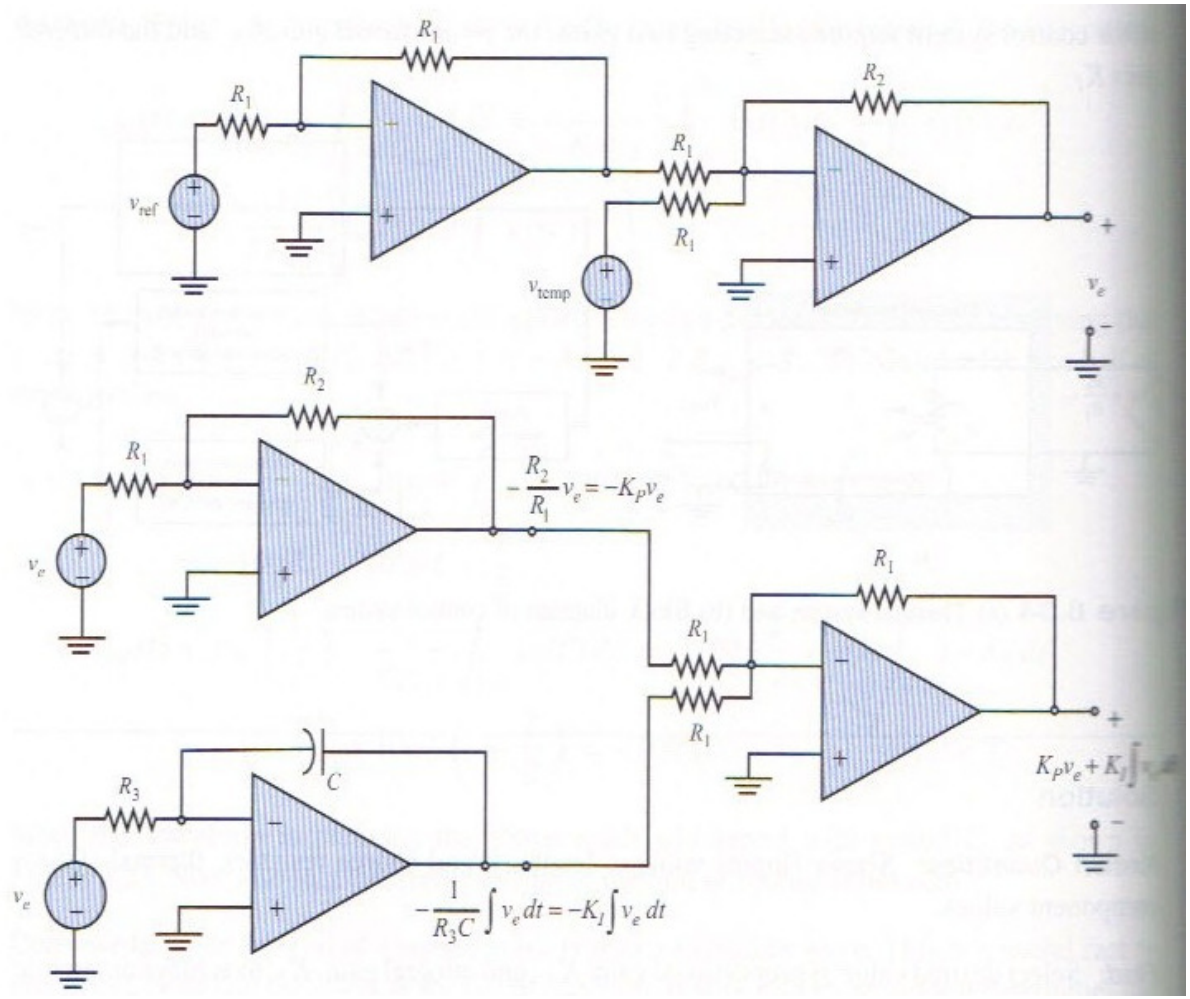

- Proportional-Integral Control Circuit: