Mechatronics Engineering and Automation
Faculty of Engineering, Ain Shams University
MCT-151, Spring 2015

Lab-3: LCDs | Serial Communication | Analog Inputs | Temperature Measurement System

Ahmed Okasha
okasha1st@gmail.com

Understanding LCD

- LCD (Liquid Crystal Display) screen is an electronic display module and find a wide range of applications. A 16x2 LCD display is very basic module and is very commonly used in various devices and circuits. These modules are preferred over seven segments and other multi segment LEDs. The reasons being: LCDs are economical; easily programmable; have no limitation of displaying special & even custom characters (unlike in seven segments), animations and so on.
- A **16x2 LCD** means it can display 16 characters per line and there are 2 such lines. In this LCD each character is displayed in 5x7 pixel matrix. This LCD has two registers, namely, Command and Data.

Understanding LCD pins

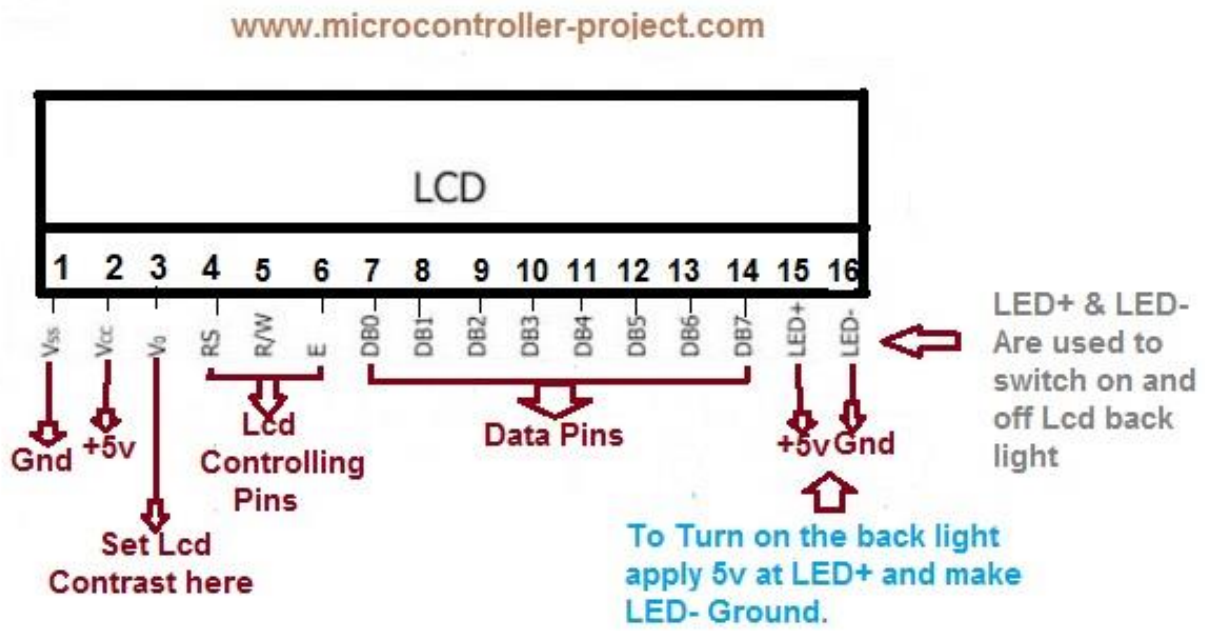

Understanding LCD pins

Pin No	Function	Name
1	Ground (0V)	Ground
2	Supply voltage; 5V (4.7V – 5.3V)	Vcc
3	Contrast adjustment; through a variable resistor	V_{EE}
4	Selects command register when low; and data register when high	Register Select
5	Low to write to the register; High to read from the register	Read/write
6	Sends data to data pins when a high to low pulse is given	Enable
7	8-bit data pins	DB0
8		DB1
9		DB2
10		DB3
11		DB4
12		DB5
13		DB6
14		DB7
15	Backlight V_{CC} (5V)	Led+
16	Backlight Ground (0V)	Led-

LCD Registers

- The command register stores the command instructions given to the LCD. A command is an instruction given to LCD to do a predefined task like initializing it, clearing its screen, setting the cursor position, controlling display etc. The data register stores the data to be displayed on the LCD. The data is the ASCII value of the character to be displayed on the LCD. Click to learn more about internal structure of a LCD.
- Why only 4 data bit not 8? The idea of 4 bit communication is introduced to save pins of a microcontroller. You may think that 4 bit mode will be slower than 8 bit. But the speed difference is only minimal.

Understanding the example code

```
#include <LiquidCrystal.h>                    // include the library code:
LiquidCrystal lcd(12, 11, 5, 4, 3, 2);        // initialize the library with the numbers of the
                                                 interface pins

void setup() {
lcd.begin(16, 2);                             // set up the LCD's number of columns and rows
lcd.print("hello, world!");                   // Print a message to the LCD.

}

void loop() {
lcd.setCursor(0, 1);                          // set the cursor to column 0, line 1, note: line 1 is the
                                                 second row, since counting begins with 0):
lcd.print(millis() / 1000);                   // print the number of seconds since reset:

}
```

Serial Communication

- Serial data transfer is when we transfer data one **bit** at a time, one right after the other.
- Used for communication between the Arduino board and a computer or other devices. All Arduino boards have at least one serial port (also known as a UART or USART): Serial. It communicates on digital pins 0 (RX) and 1 (TX) as well as with the computer via USB. Thus, if you use these functions, you cannot also use pins 0 and 1 for digital input or output.

Serial Communication

- When you **Compile/Verify** what you're really doing is turning the sketch into **binary data** (ones and zeros). When you **Upload** it to the Arduino, the bits are shoved out one at a time through the USB cable to the Arduino where they are stored in the main chip.

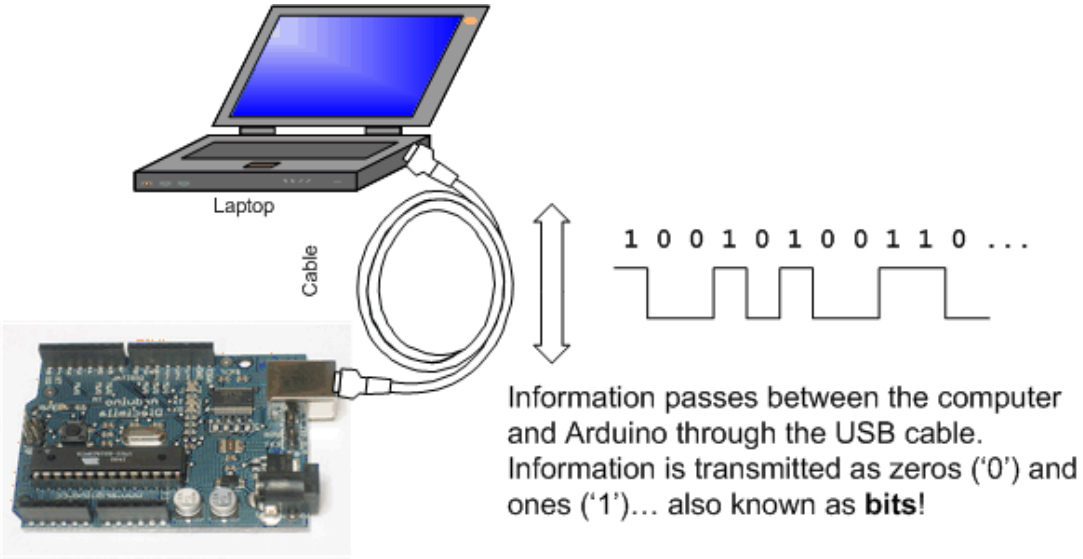

Notes

library name	procedure name	(input values)
Serial	begin	(9600)

- Baud rate: 9600 bps, this is how fast the connection can read and write bits on the wire.
- TO show the serial monitor: Tools>>serial monitor

Baud rate match up!

If you ever find that you're getting a whole lot of garbage instead of proper text, make sure that you have the correct baud rate selected in the drop down menu of the Serial Monitor. Note that this communication baud rate is indepedent of the upload process, which is fixed at 19200 bps.

Example

```
/*
 * Hello World!
 *
 * This is the Hello World! for Arduino.
 * It shows how to send data to the computer
 */


void setup()                    // run once, when the sketch starts
{
  Serial.begin(9600);           // set up Serial library at 9600 bps
}

void loop()                     // run over and over again
{
  Serial.println("Hello world!");  // prints hello with ending line break
  delay(1000);
}
```

Example

- Go to Tools>> Serial Monitor

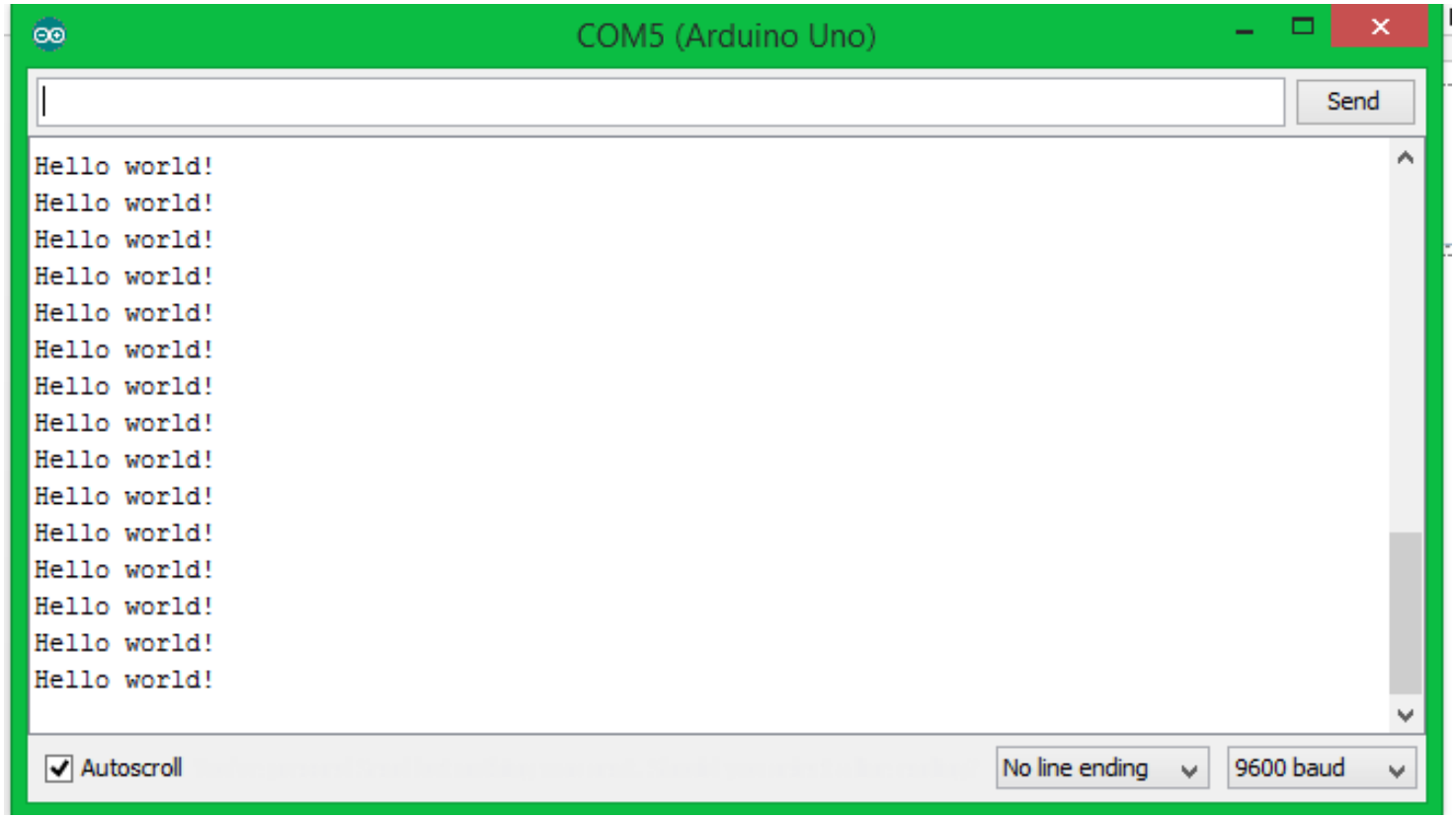

Analog Inputs

- Arduino UNO has 6 analog inputs pins to deal with a wide variety of analog sensors such as Potentiometers, LDRs, pressure sensor,…etc.

How to read from analog pins?

analogRead(pin):

- Reads the value from the specified analog pin. The Arduino board contains a 6 channel, 10-bit analog to digital converter.
- This means that it will map input voltages between 0 and 5 volts into integer values between 0 and 1023.
- This yields a resolution between readings of: 5 volts / 1024 units or, .0049 volts (4.9 mV) per unit.

Analog Sensor Examples

- Potentiometer
- Photo-resistor
- LM35 Temperature sensor

Potentiometer

- Your pot has a circular 'track' that acts as a resistor, in our case it's a 10 kΩ resistor. However, the difference with a pot, is that there is also a middle connection called the 'slider'. This connection is rotated when you turn the pot. So if you connect one end of the pot to 5V and the other to GND, then the voltage at the slider will vary between 0 and 5V as you turn it.

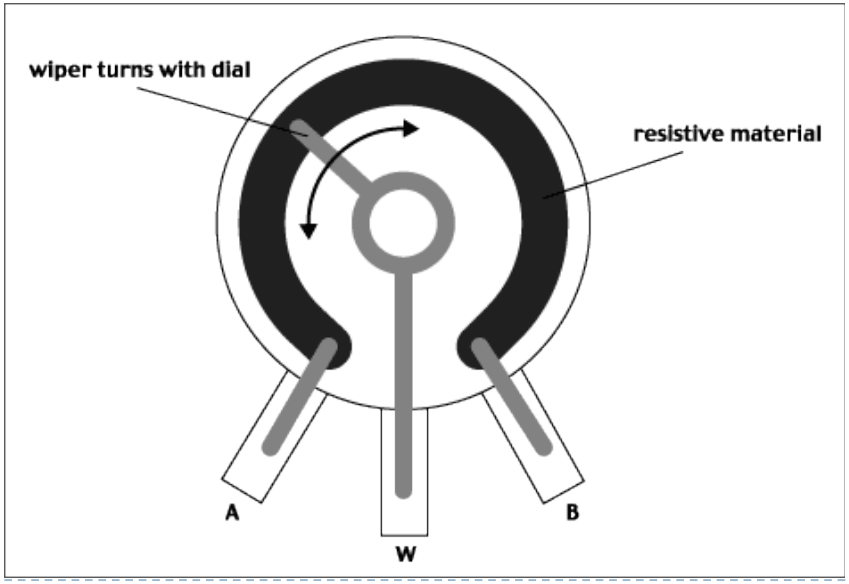

Example:

```
int val = 0;          // variable to store the value read

void setup()
{
  Serial.begin(9600);          //  setup serial
}

void loop()
{
  val = analogRead(analogPin);    // read the input pin
  Serial.println(val);            //Serial print
}
```

Photocell/Photoresistor/LDR

- The photocell used is of a type called a light dependent resistor, sometimes called an LDR. As the name suggests, these components act just like a resistor, except that the resistance changes in response to how much light is falling on them. This one has a resistance of about 50 kΩ in near darkness and 500 Ω in bright light. To convert this varying value of resistance into something we can measure on an Arduino's analog input, it need to be converted into a voltage.

Interfacing LDR to Arduino

- The simplest way to do that is to combine it with a fixed resistor. The resistor and photocell together behave rather like a pot. When the light is very bright, then the resistance of the photocell is very low compared with the fixed value resistor, and so it is as if the pot were turned to maximum. When the photocell is in dull light the resistance becomes greater than the fixed 1kΩ resistor and it is as if the pot were being turned towards GND.

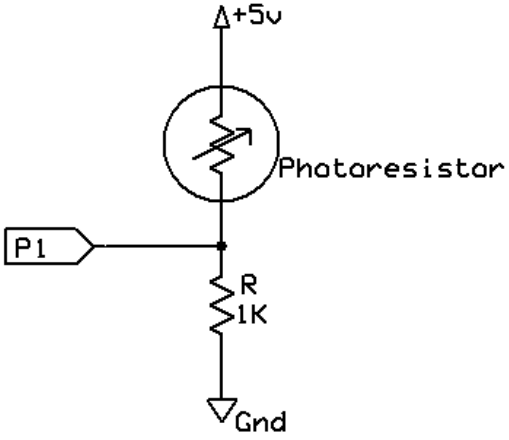

LM35

- The LM35 is an integrated circuit analog sensor that can be used to measure temperature with an electrical output proportional to the temperature (in ºC)

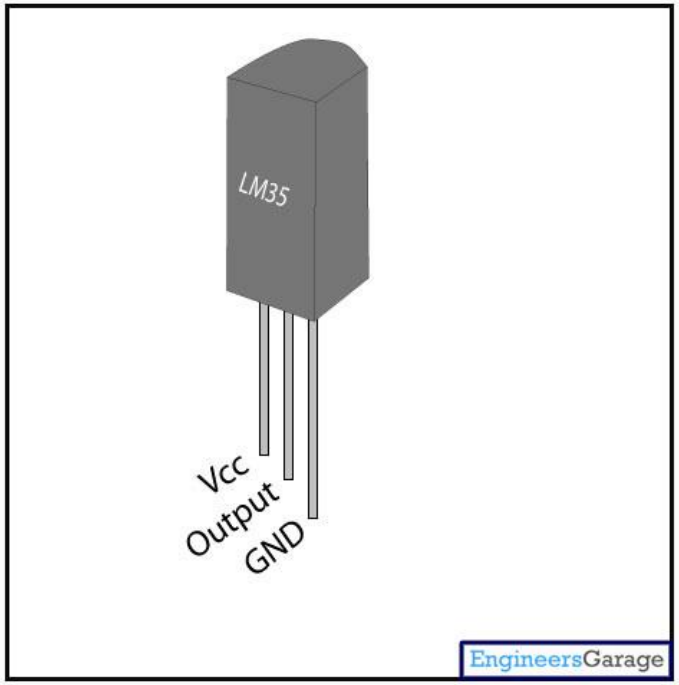

LM35 sensitivity equation

- The analog value read from LM35 is converted to a digital value in the range of (0-1023).

The value read from the sensor

- LM35 sensitivity:

$$Sensitivity = \frac{Output\ Voltage\ (Vin)}{Input\ Temperature\ (T)} = 10\,\frac{mV}{°C} = 0.01\,\frac{V}{°C}$$

This means: For $Vin = 1023\ (5V) \gg T = \frac{5}{0.01} = 500\ °C$

$$1023\ \text{-----}\rightarrow 500°C$$

$$Vin\ \text{-----}\rightarrow T = ?$$

$$T = \frac{Vin}{1023} * 500$$

Temperature measurement system

- Using the same LCD Hardware, expand your work to integrate the temperature sensor LM35, and make the necessary change to read from the sensor, convert the read value using the proper conversion, and display the reading on the LCD

References

- http://www.engineersgarage.com/electronic-components/16x2-lcd-module-datasheet
- https://electrosome.com/interfacing-lcd-with-pic-microcontroller-hi-tech-c/