Mechatronics Engineering and Automation
Faculty of Engineering, Ain Shams University
MCT-151, Spring 2015

Lab-2: Interfacing Seven Segment Display

Ahmed Okasha
okasha1st@gmail.com

LAB (2) Objective:

- Understanding how to interface a seven segment display to Arduino, through different sets of hands-on exercises.

Seven Segment Display

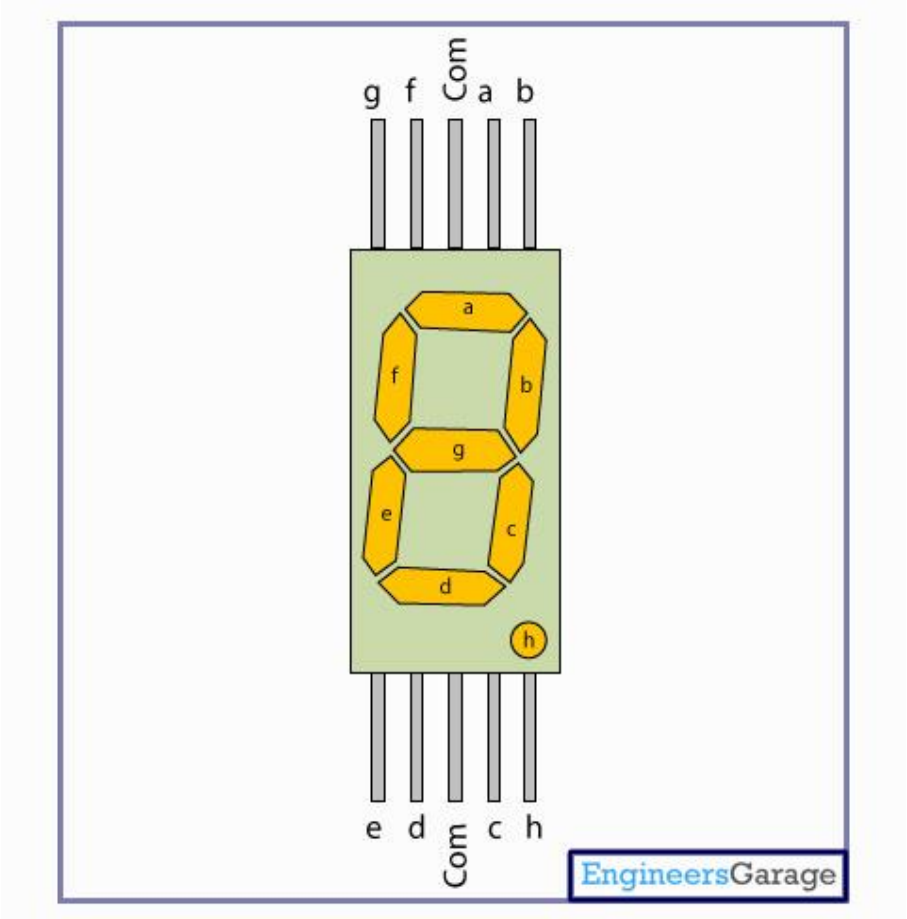

7-Segment Display Segments for all Numbers.

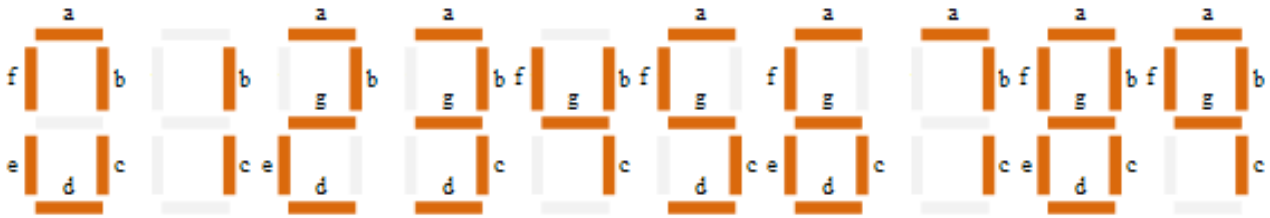

Then for a 7-segment display, we can produce a truth table giving the individual segments that need to be illuminated in order to produce the required decimal digit from 0 through 9 as shown below.

7-segment Display Truth Table

Decimal Digit	Individual Segments Illuminated						
	a	b	c	d	e	f	g
0	×	×	×	×	×	×	
1		×	×				
2	×	×		×	×		×
3	×	×	×	×			×
4		×	×			×	×
5	×		×	×		×	×
6	×		×	×	×	×	×
7	×	×	×				
8	×	×	×	×	×	×	×
9	×	×	×			×	×

Two Hardware Configurations

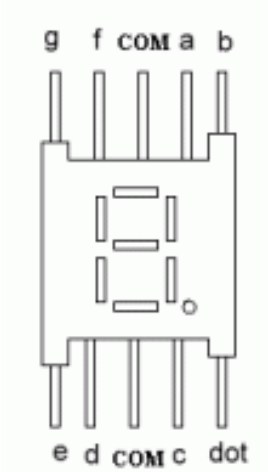

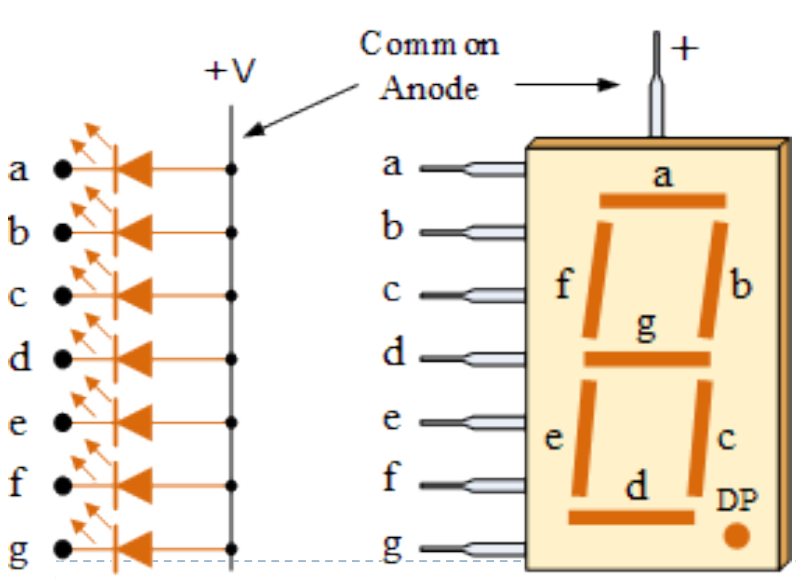

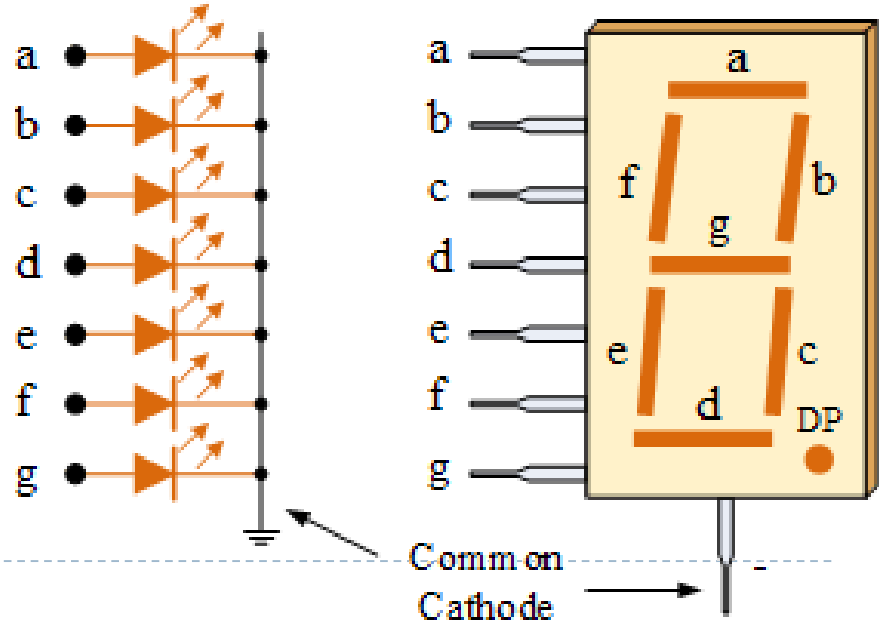

Exercises

- Wire the Sev-Seg to your Arduino, and write a sketch to make the Sev-Seg count up and repeats.
- Modify your sketch to make the Sev-Seg count down and repeats.
- Connect a push button to your Arduino, and write a sketch so that the seven segment initially displays 0, and when the button is pressed once, the Sev-Seg counts up.
- Modify the previous program to let the button counts down.

Your Hardware might look like

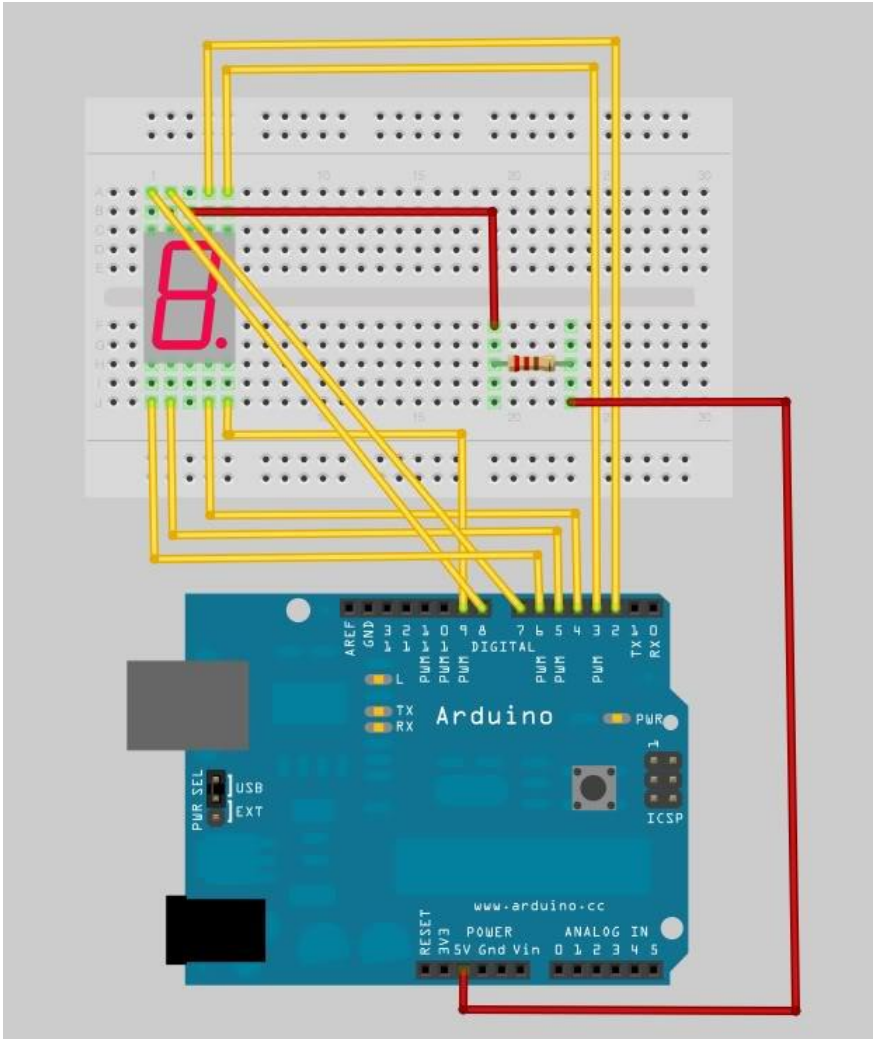

Time Division Multiplexing

- What if you want to connect more than one Sev-Seg display to your Arduino? your pins will run out !
- TDM i.e time division multiplexing depends on that the human eye cannot observe fast switching (on and off).
- The idea is to connect the 7 pins of the display with each other and then connect it to the Arduino, but the ground of the displays are not connected directly but there is a transistor in between which could be turned on/off by the controller.
- Thus what ever is to be displayed is displayed by making use of time axis displaying digits one by one on the display, but the switching between the display is so fast that human eye can not see it.